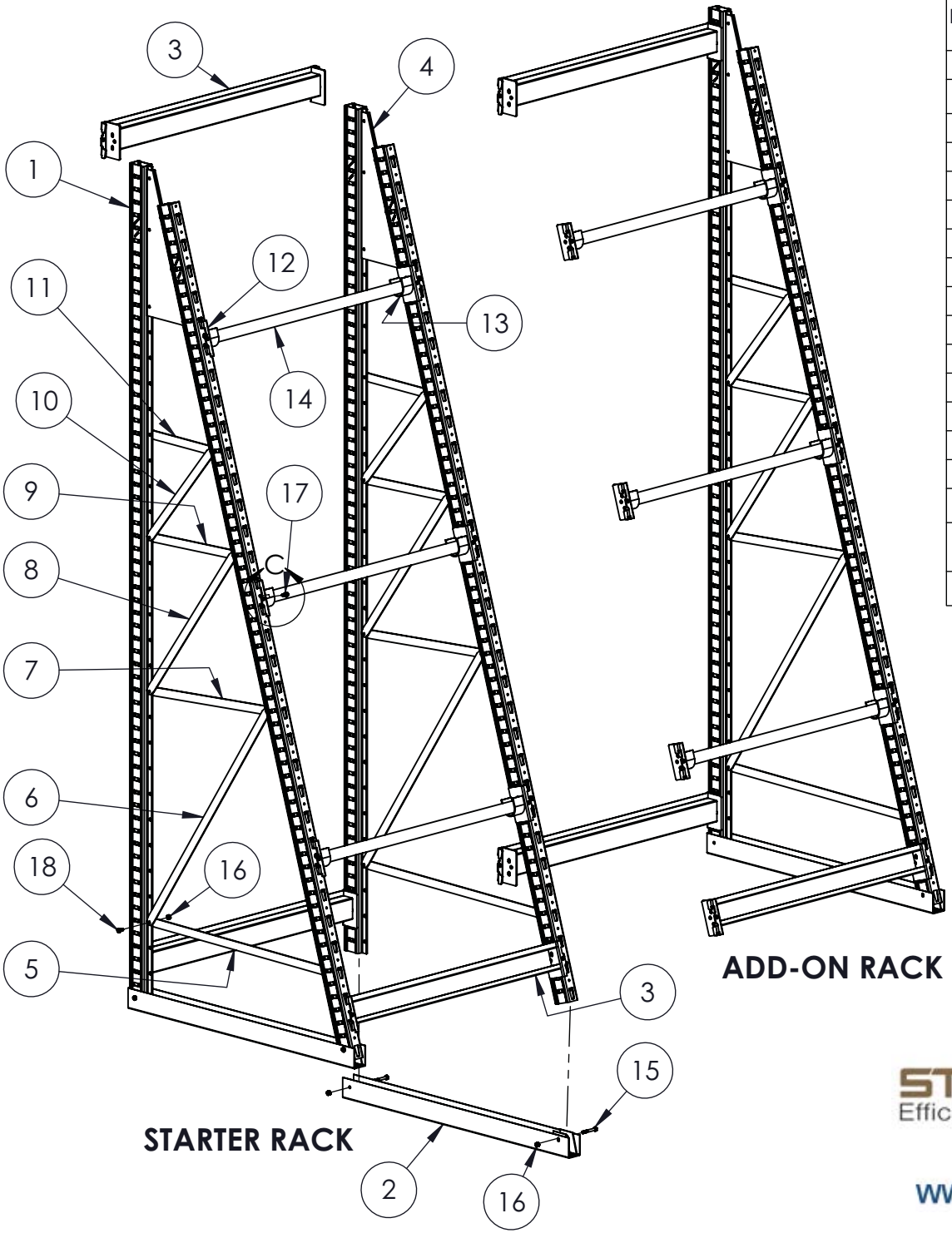

ITEM NO.	PART NUMBER	DESCRIPTION	Starter QTY. 99/123	Add on QTY. 99/123
1	5003-hh	H-POST	4	2
2	HRR36BASE	BASE CHANNEL WELDMENT	2	1
3	5029-RRww	H-POST HORIZONAL BEAM	3/4	3/4
4	HRRhhGUS	TOP GUSSET	4	2
5	HRRhhSWA1	BOTTOM BRACE	2	1
6	HRRhhSWA2	DIAGONAL BOTTOM BRACE	2	1
7	HRRhhSWA3	MID BOTTOM BRACE	2	1
8	HRRhhSWA4	DIAGONAL MID BRACE	2	1
9	HRRhhSWA5	UPPER BRACE	2	1
10	HRRhhSWA6	UPPER DIAGONAL BRACE	2	1
11	HRR-SWA7	TOP BRACE	2	1
12	HRR-ASB-L	AXLE SUPPORT BRACKET-LEFT	3 / 4	3 / 4
13	HRR-ASB-R	AXLE SUPPORT BRACKET-RIGHT	3 / 4	3 / 4
14	HRR-AXLE-ww	Axle for ww" Rack	3 / 4	3 / 4
15	50101A	1/4-20x2 HEX HEAD BOLT GRADE 5	4	2
16	N111	1/4-20 KEP NUT	32	16
17	5045	#14X5/8 HEX WASHER HEAD SMS TYPE B ZINC PLATED	12 /14	6 /7
18	MS101	1/4-20X 3/4 PAN HEAD SCREW	28	14

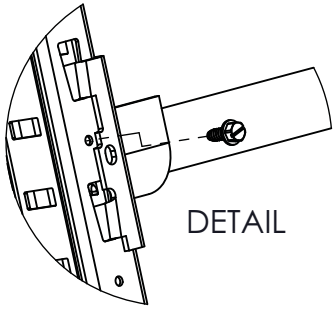

UNIT PART NUMBERS
HRR363699-3S
HRR483699-3S
HRR3636123-4S
HRR4836123-4S
HRR363699-3A
HRR483699-3A
HRR3636123-4A
HRR4836123-4A

STOREMORESTORE
Efficient Productive Storage Products
1-855-786-7667
WWW.STOREMORESTORE.COM

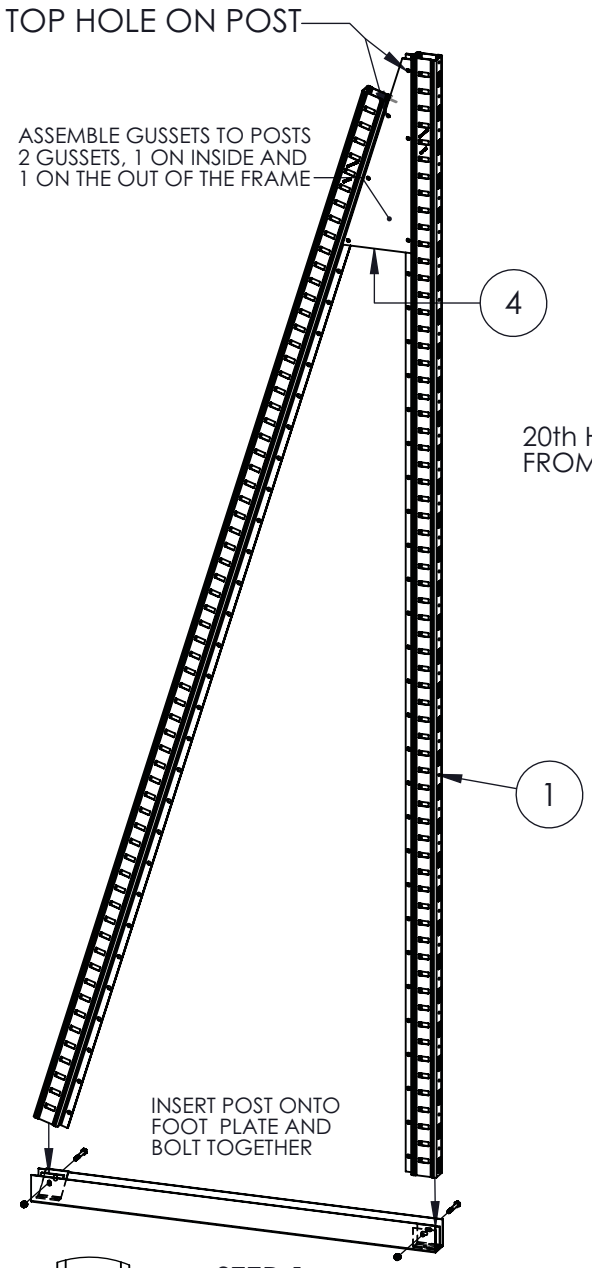

STEP 1

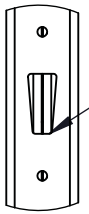

SMALL END OF KEY SLOT MUST FACE DOWN ON BOTH POST

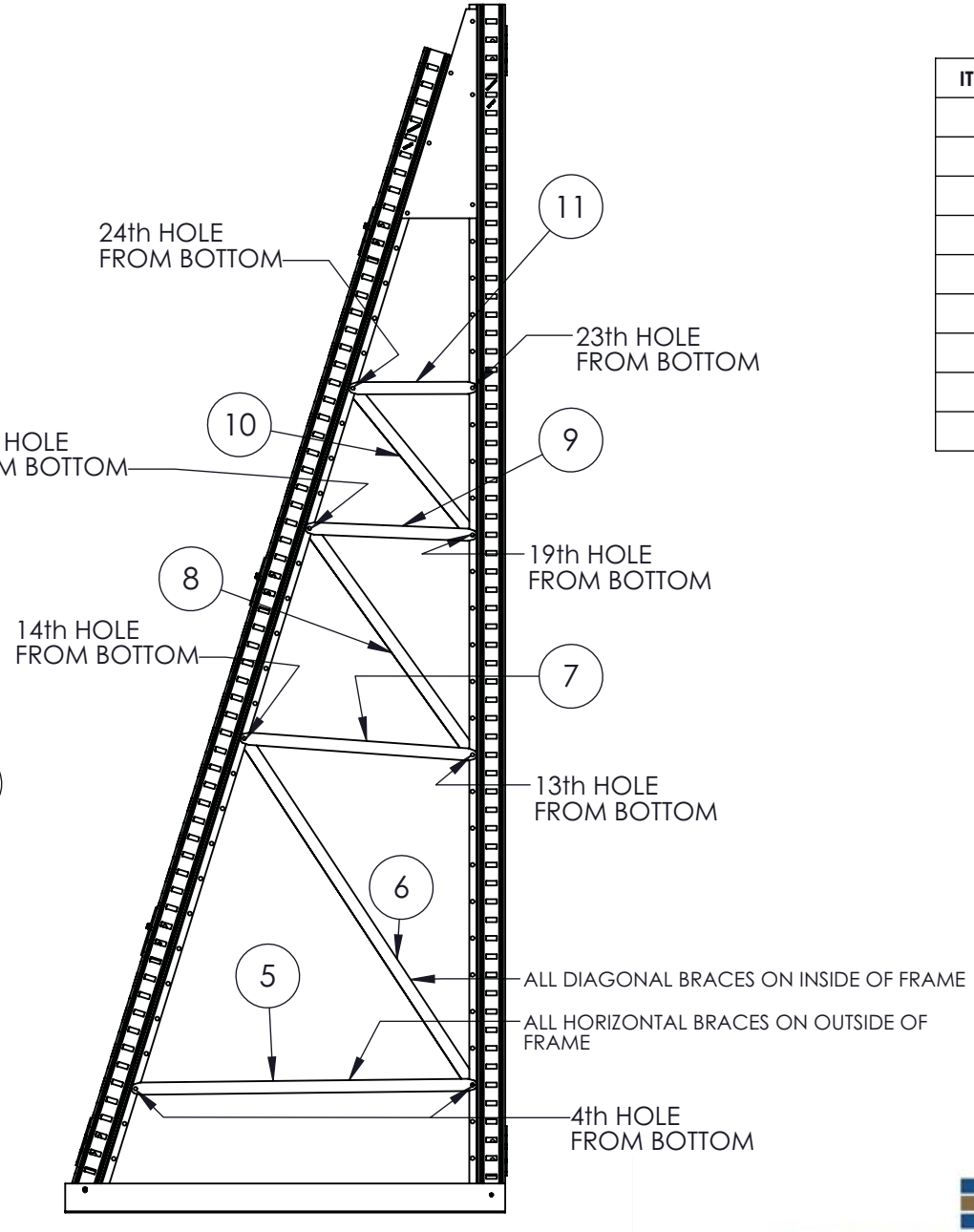

STEP 2

BRACE PLACEMENT

ITEM NO.	LENGTH
1	98 3/4
4	17 1/8
5	28 7/32
6	34 37/64
7	19 3/8
8	23 15/32
9	14
10	16 1/8
11	10 27/64

FOR 8' TALL RACK

STOREMORESTORE
Efficient Productive Storage Products
1-855-786-7667
WWW.STOREMORESTORE.COM

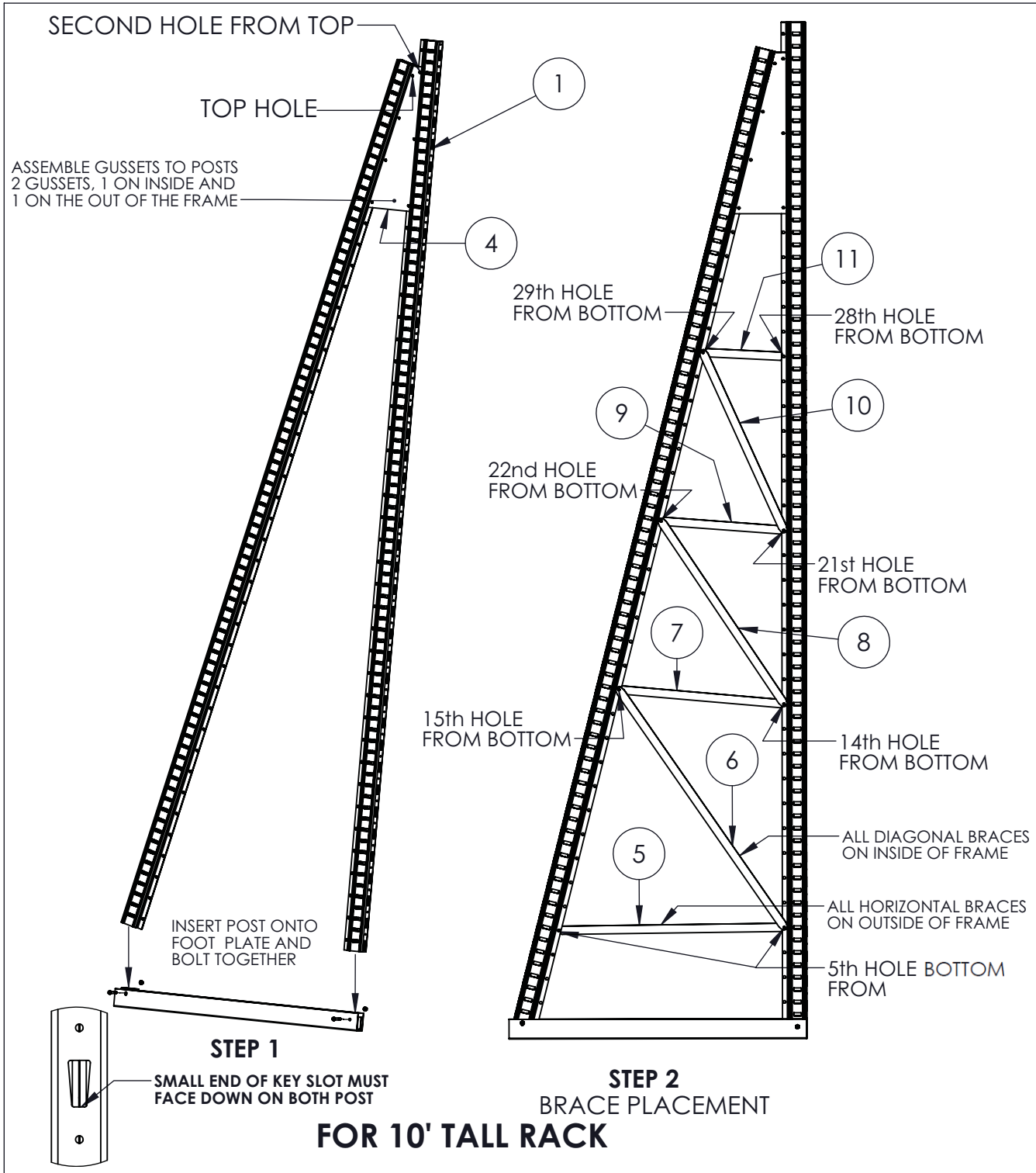

ITEM NO.	LENGTH
1	122 3/4
4	17 1/8
5	27 29/32
6	34 37/64
7	19 3/8
8	23 15/32
9	15 9/16
10	16 1/8
11	10 27/64
22	

FOR 10' TALL RACK

STOREMORESTORE
Efficient Productive Storage Products
1-855-786-7667
WWW.STOREMORESTORE.COM