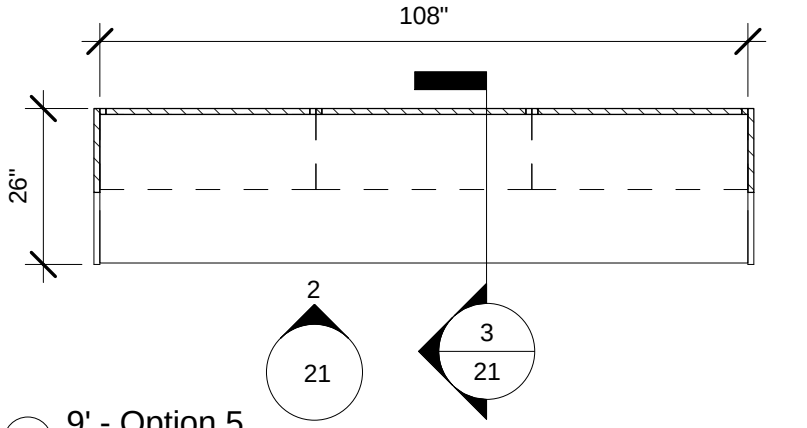

1 9' - Option 5

3/8" = 1'-0"

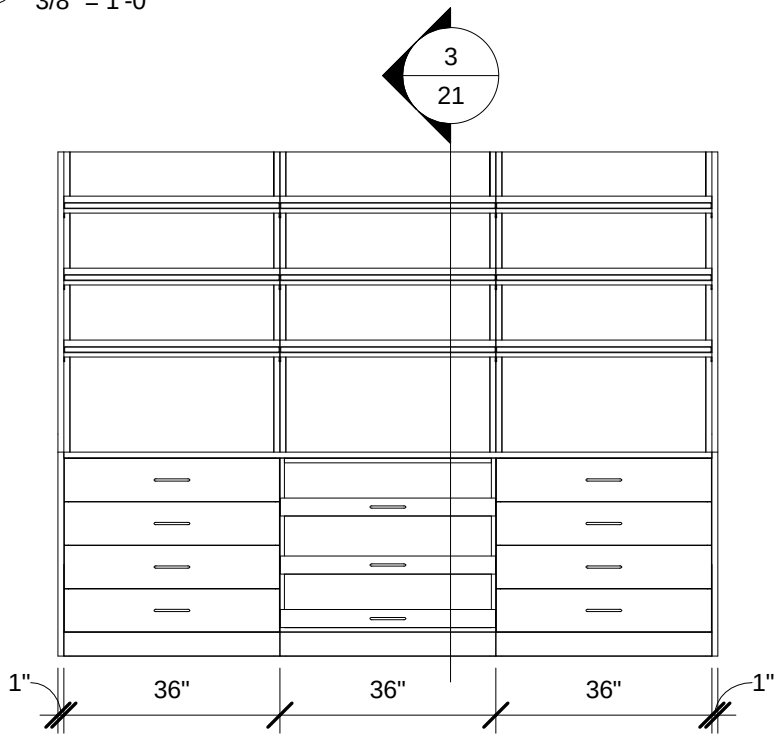

2 9' - Option 5 Front

3/8" = 1'-0"

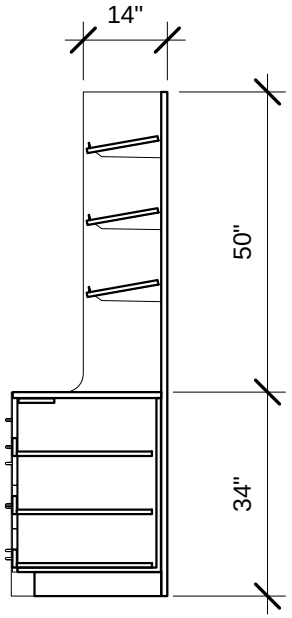

3 9' - Option 5 Section

3/8" = 1'-0"

4 9' - Option 5

SSG-PH09-5-L