HIGH CAPACITY RIVETWELL WATERFALL DECK SHELVING

BY HALLOWELL

RECEIVING INSTRUCTIONS

1. Check the number of packages (parts) received against the bill of lading. If any shortages, secure a "Shortage Notation" from the carrier and file a claim. Check material for damage. If any is damaged, secure a "Damage Notation" from the carrier and file a claim against carrier.
2. Check material received against your "Copy of Order".
3. When unpaking, arrange like parts together and as close as possible to working area in which they are assembled.
4. Tools required are a Rubber Mallet and a Screw Driver when using center supports.
5. Familiarize yourself with all the component parts.
6. Save this document for future reference.

ASSEMBLY INSTRUCTIONS

1. Start by putting side frame assemblies together by inserting front to back beams (part ABS/ABH) into post at top and bottom.
2. Once both side frame assemblies are made, take one side frame assembly and insert one left to right angle beam (ABS/ABH) into the bottom of front post and one left to right beam into the bottom of the rear post. Stand frame up (side frame is vertical). The frame will now stand up by itself. Insert the opposite end of the same left to right beams (ABS/ABH) into the other side frame assembly.
3. Now with the unit standing, assemble the bottom center support (if required) to angle beams and/or channel beams using (4) 1/4-20 x 1/2 bolts and hex nuts.
4. Place the bottom Waterfall shelf in the unit on the outside of left to right angle beam (ABS/ABH).See Sheet 4 for a pictorial view of the assembly.
5. Continue to assemble additional beams and shelves (working from the bottom up) to complete the unit.
6. Waterfall shelves can also be installed after the frame is assembled as long as shelf spacing permits. See sheet 4 of more information.

NOTES

1. When inserting beams into slots on post, beams must be seated into bottom of slots with a Rubber Mallet.
2. Beams cannot be placed in the level occupied by a splice plate.

WARNING

RIVETWELL units are intended for use in hand-loaded applications only.

Powered material handling equipment should never be used around RIVETWELL units without HALLOWELL approval.

STOREMORESTORE
Efficient Productive Storage Products
1-855-786-7667
WWW.STOREMORESTORE.COM

COMPONENTS

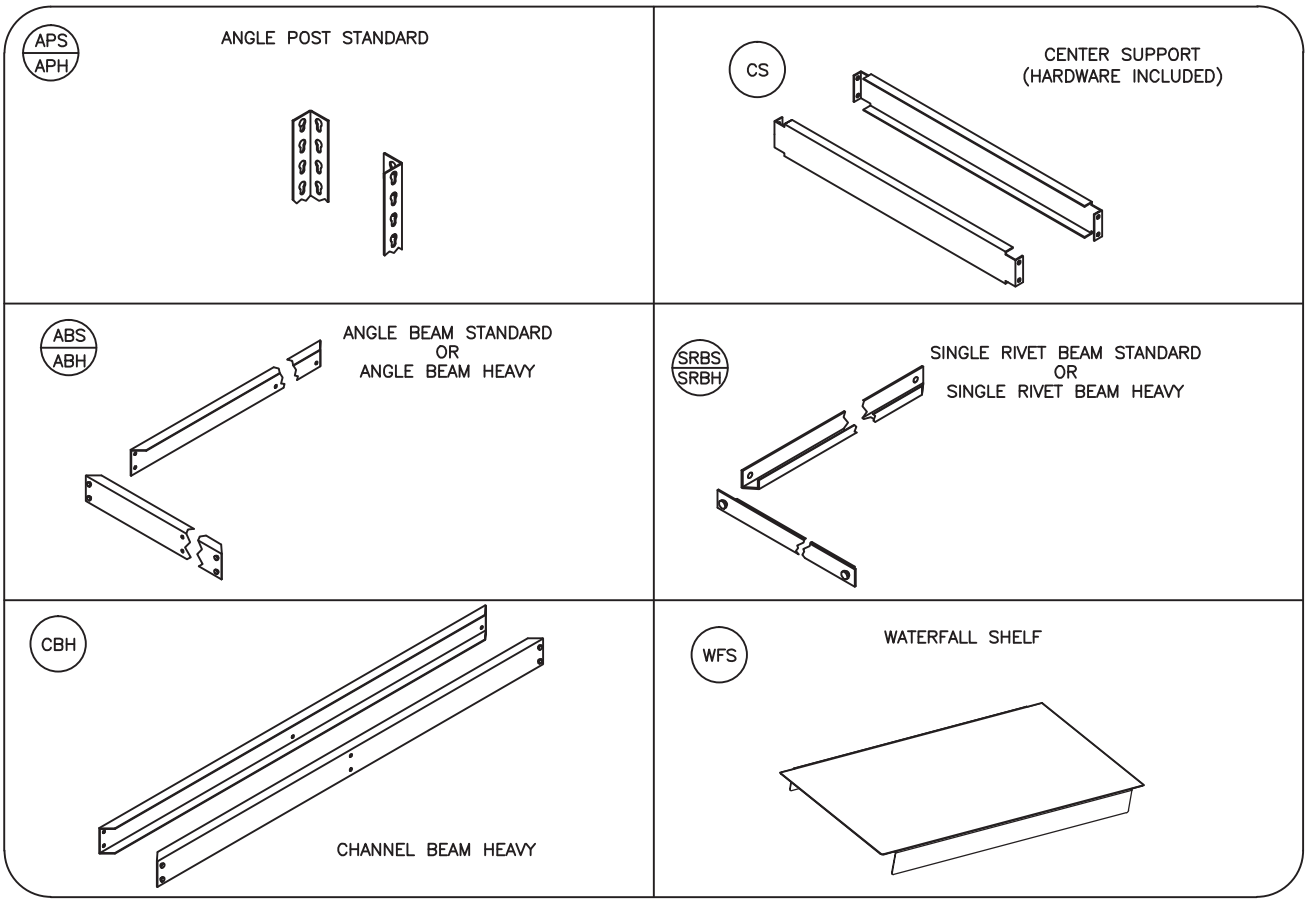

STOREMORESTORE
Efficient Productive Storage Products
1-855-786-7667
WWW.STOREMORESTORE.COM

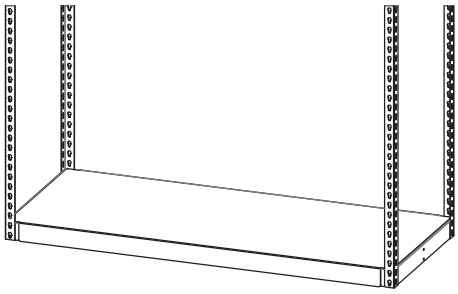

BOTTOM SHELF INSTALLED

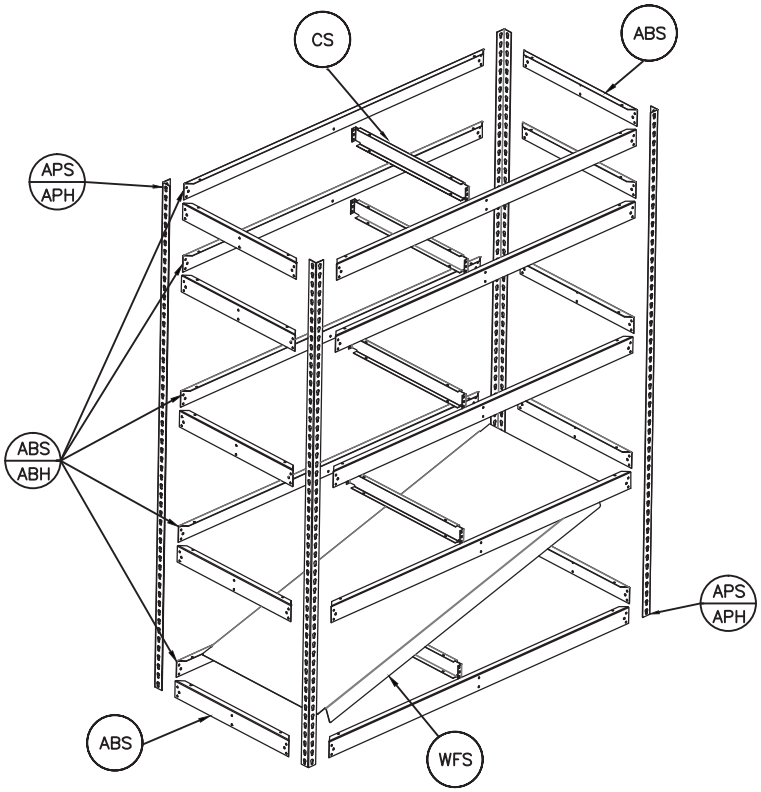

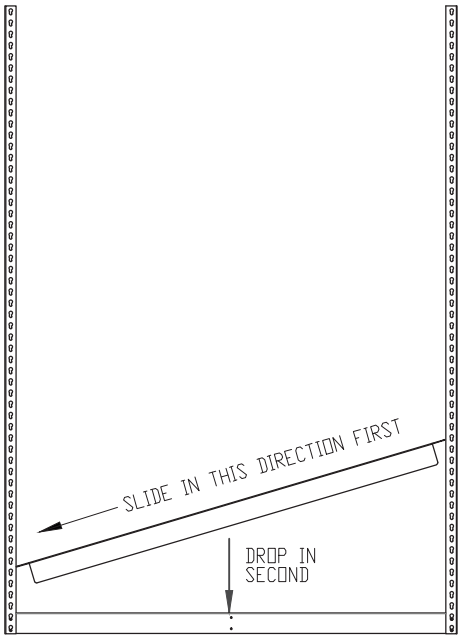

SEE NOTE 1

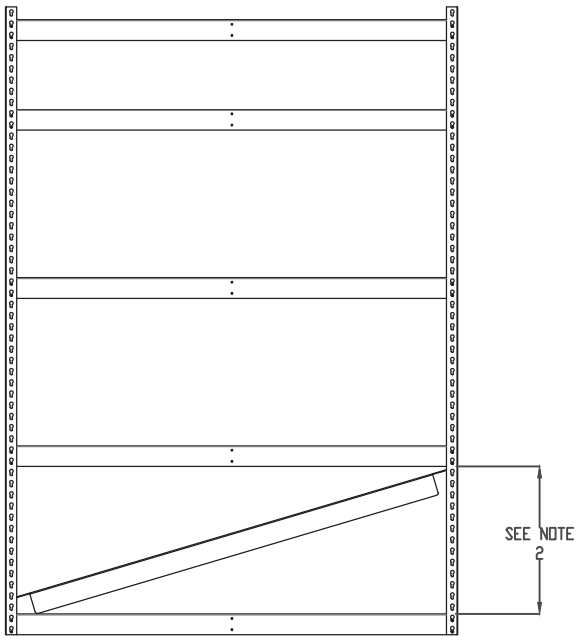

NOTES:

1) WHEN ASSEMBLING SHELVING UNITS WITH WATERFALL SHELVES, START FROM THE BOTTOM AND INSTALL EACH SHELF AFTER THE FRONT TO BACK AND LEFT TO RIGHT BEAMS HAVE BEEN INSTALLED AT EACH SHELF LEVEL.

2) SHELF CAN ALSO BE INSERTED DIAGONALLY INTO THE UNIT AS SHOWN AFTER THE FRAME IS ASSEMBLED AS LONG AS SHELF SPACING PERMITS.

STOREMORESTORE
Efficient Productive Storage Products
1-855-786-7667
WWW.STOREMORESTORE.COM