STOREMORESTORE
Efficient Productive Storage Products
1-855-786-7667
WWW.STOREMORESTORE.COM

16/32 Modular Laptop Security / Charging Cabinet and Optional Caster kit

ASSEMBLY INSTRUCTION

CONTENTS

REF.	QTY.	DESCRIPTION	REF.	QTY.	DESCRIPTION
1	1	RIGHT SIDE PANEL	H1	13	#5 x 12mm Lg. Phillips Pan Head Screw
2	1	BACK PANEL	H2	2	Socket Support
3	1	LEFT SIDE PANEL	H3	4	M4 x 10mm Lg. Phillips Countersink Screw
4	1	TOP PANEL	H4	4	M8 x 1.25 x 20mm Lg. Phillips Pan Head Screw
5	1	16 OUTLET POWER STRIP	H5	4	Lock Washer
6	1	BOTTOM PANEL	H6	4	Plain Washer
7	17	DIVIDER	H7	4	M8 x 1.25 x 20mm Lg. Thumb Screw
8	9	TRAY DIVIDER	H8	4	Tray Support Bracket
9	1	TRAY	H9	10	#4 x 10mm Lg. Phillips Pan Head Screw
10	1	RIGHT DOOR PANEL	H10	(1 Set)	Key
11	1	LEFT DOOR PANEL			

Note:

Step 1 through 7 unit assembles in the upside down position.

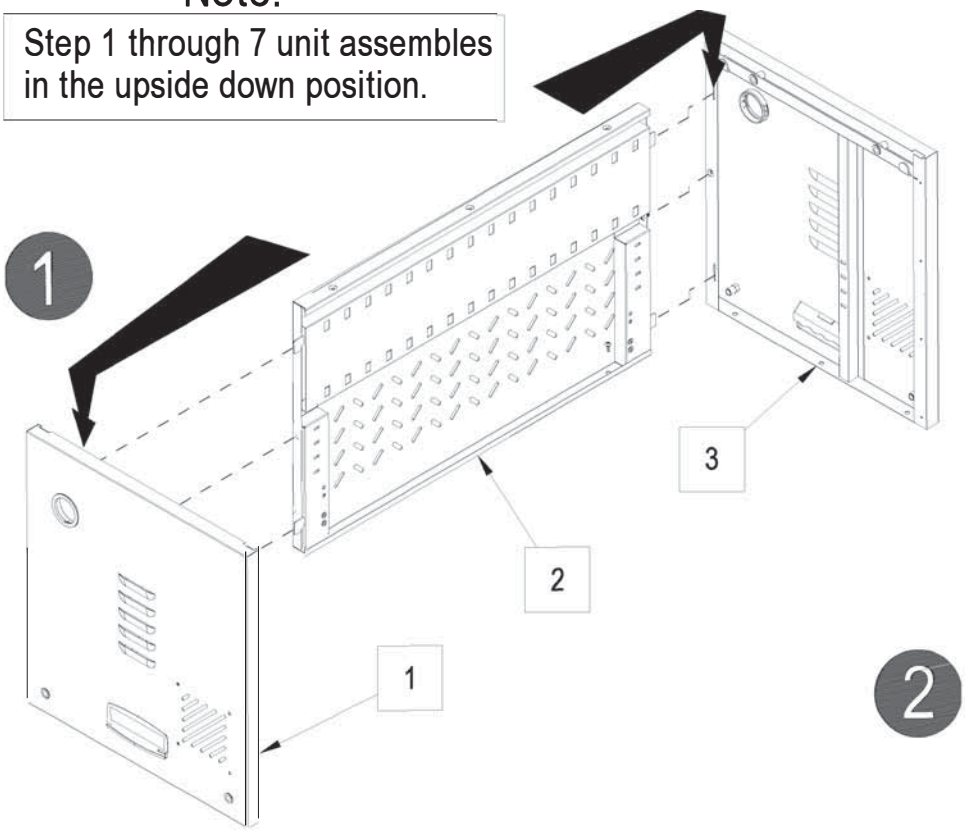

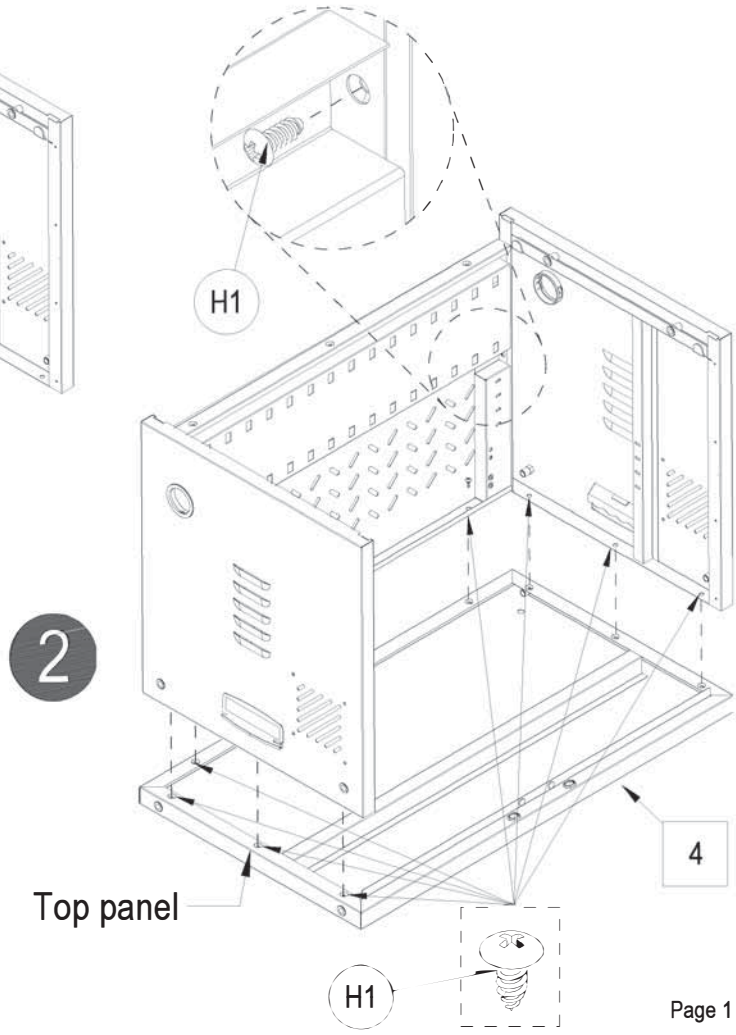

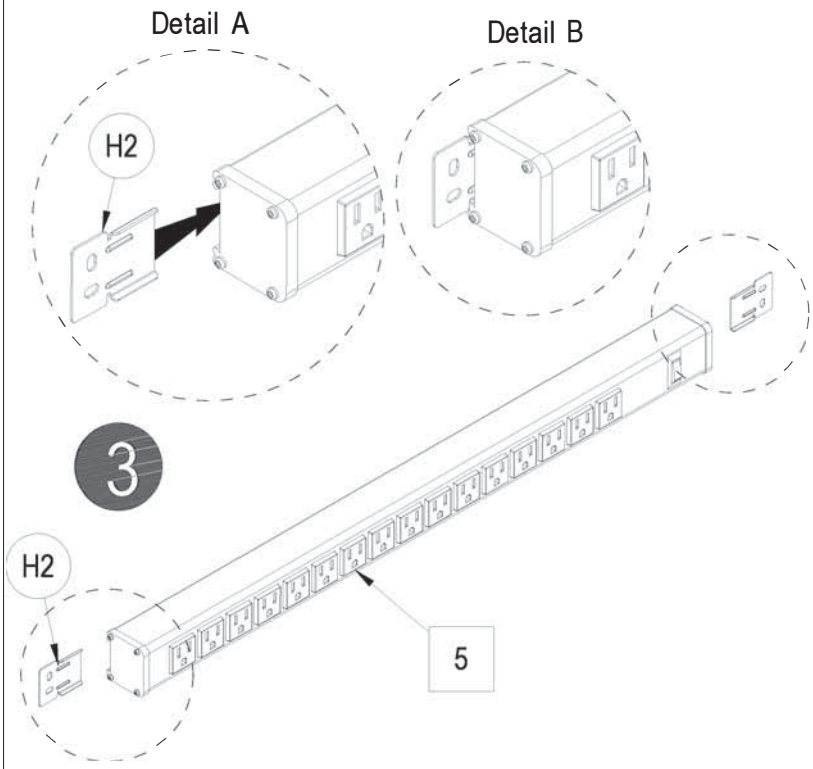

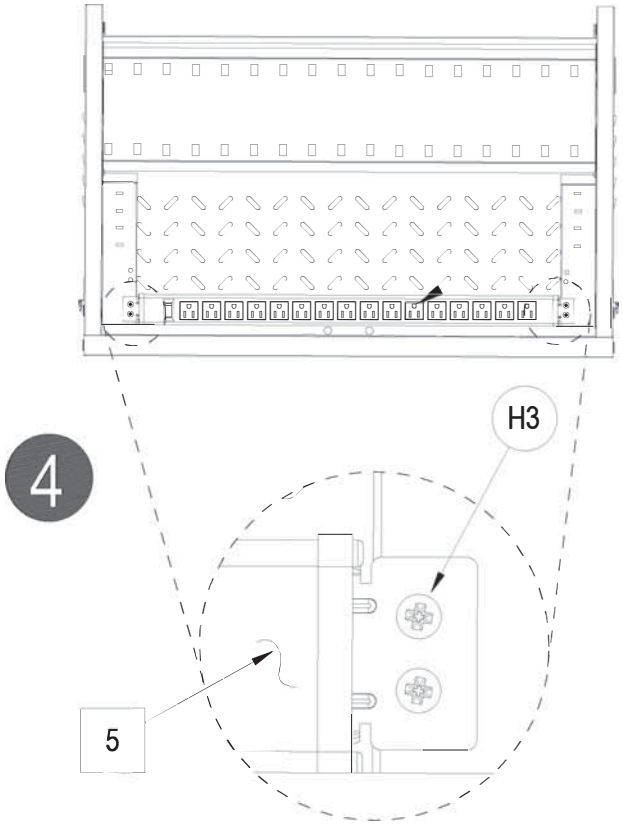

STOREMORESTORE
Efficient Productive Storage Products
1-855-786-7667
WWW.STOREMORESTORE.COM

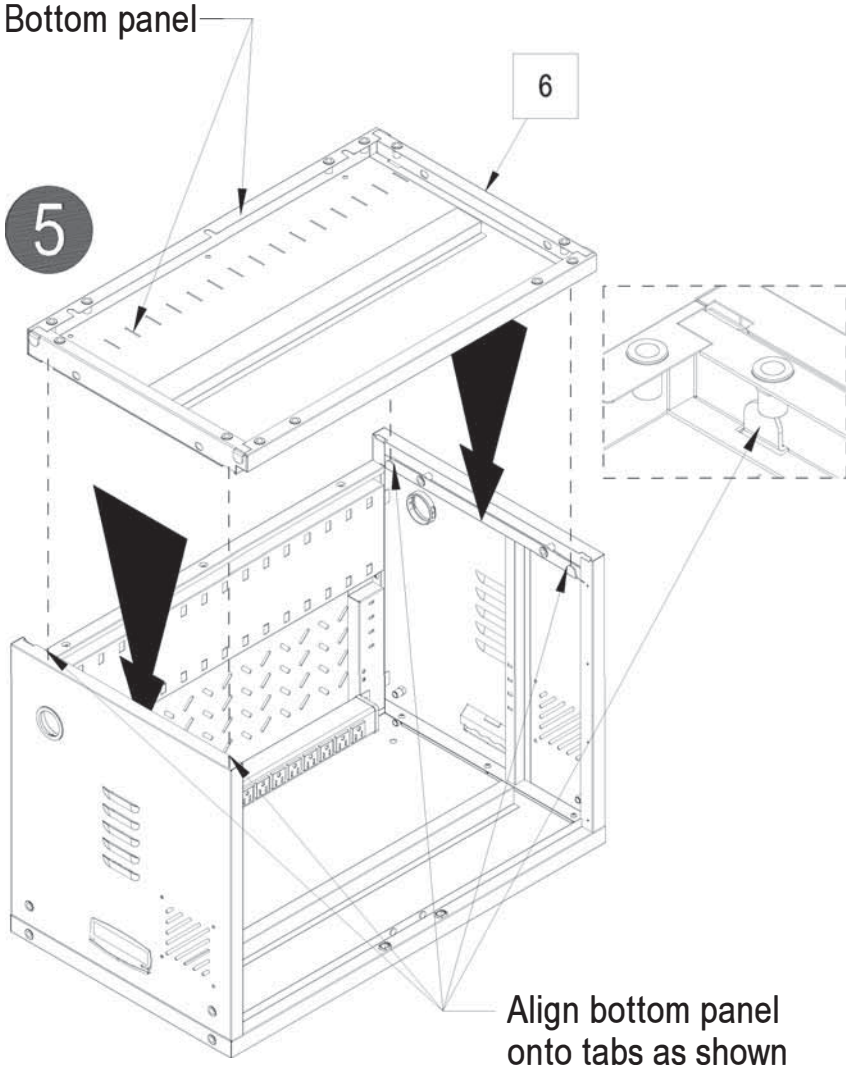

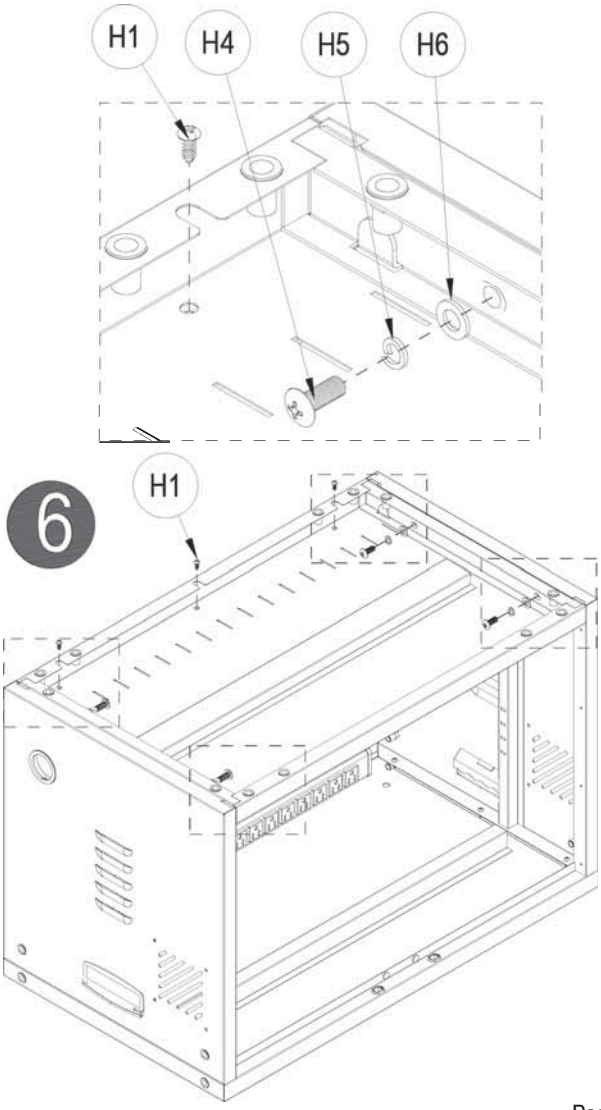

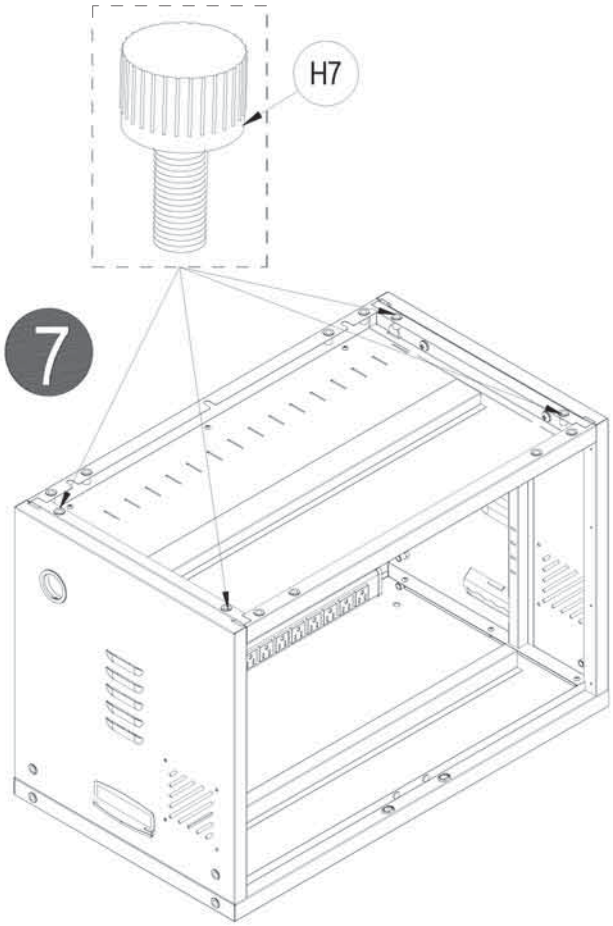

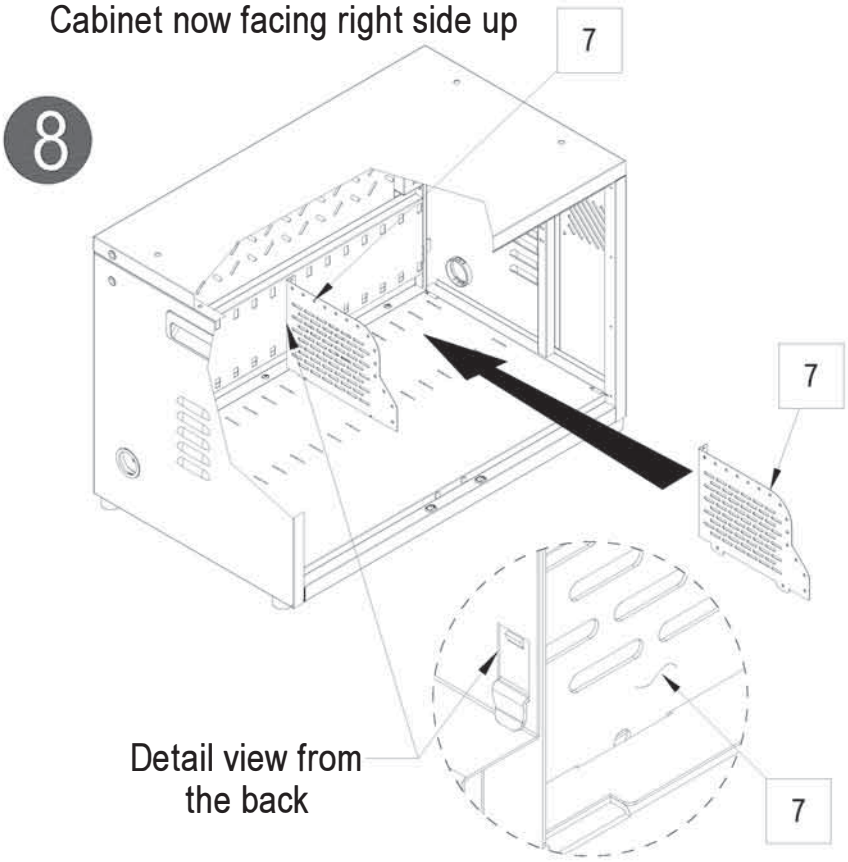

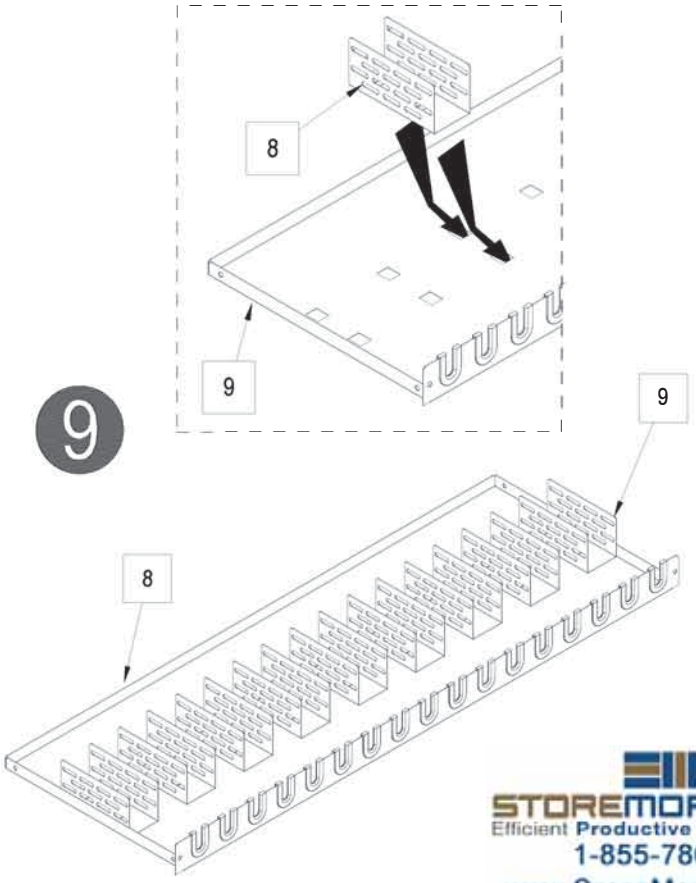

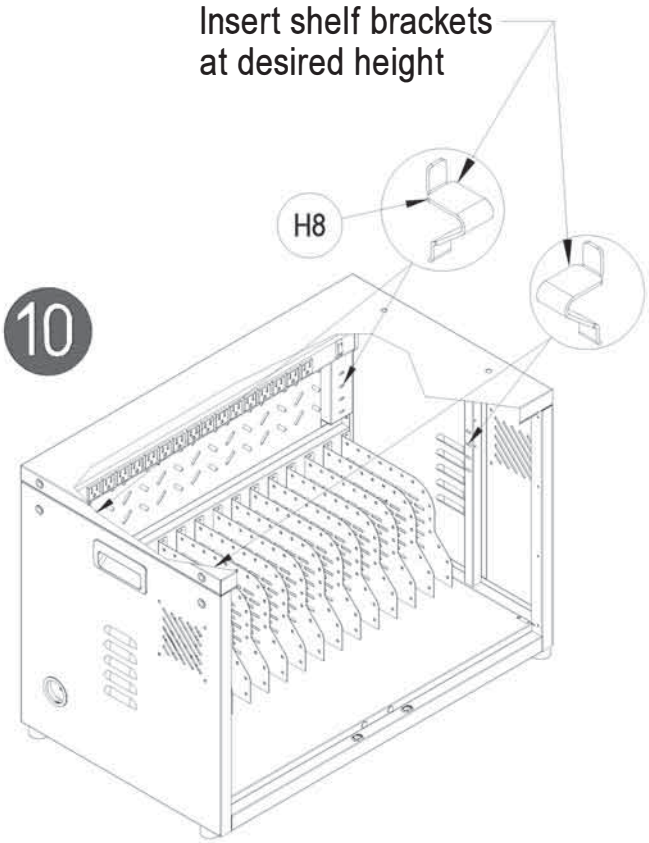

STOREMORESTORE
Efficient Productive Storage Products
1-855-786-7667
WWW.STOREMORESTORE.COM

11

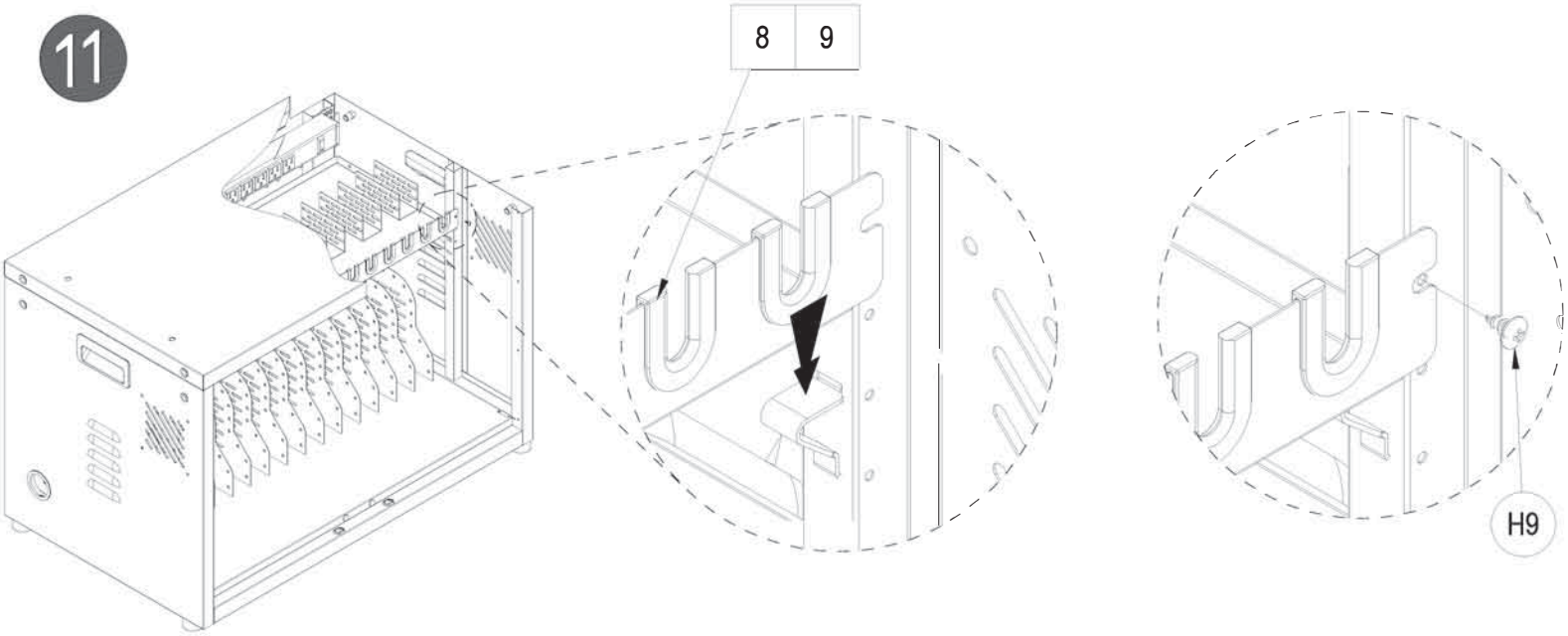

12

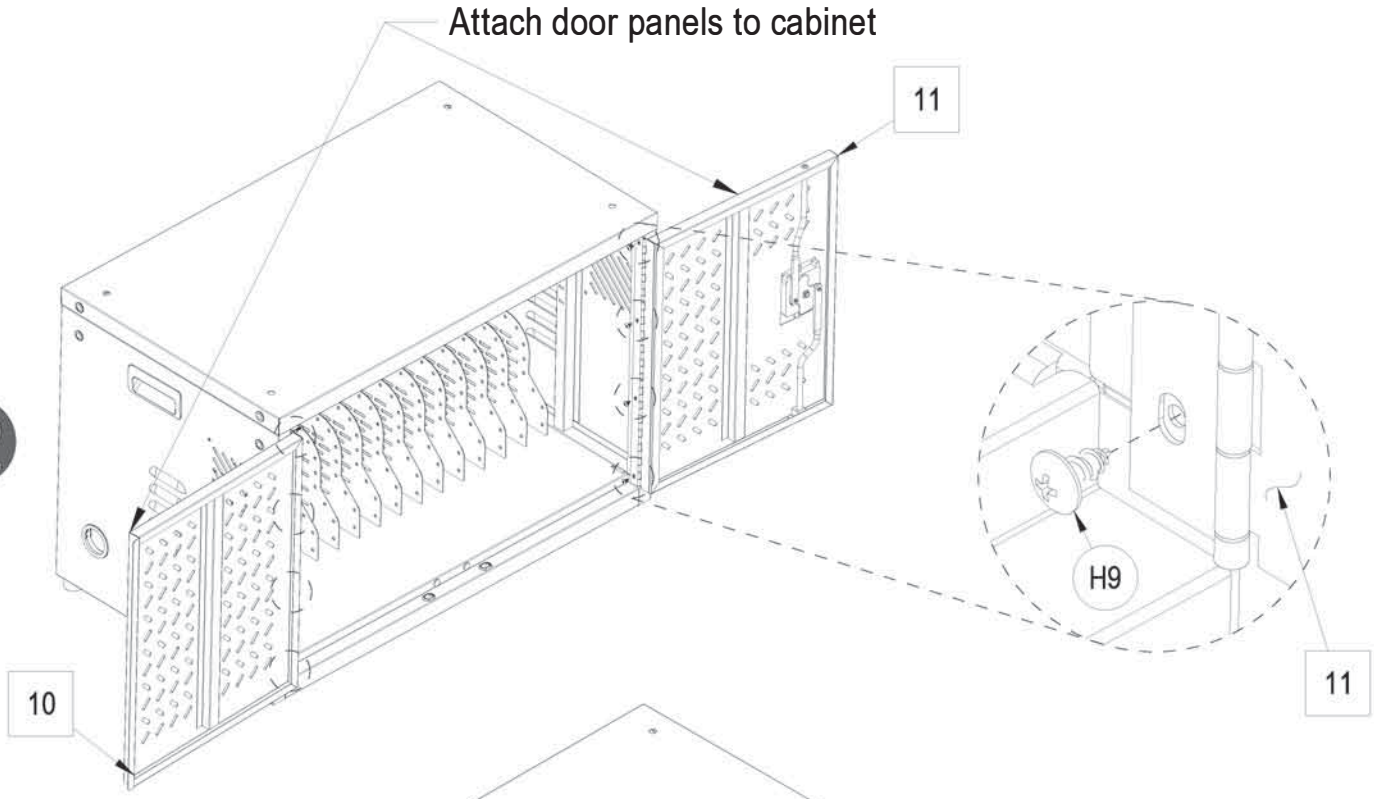

13

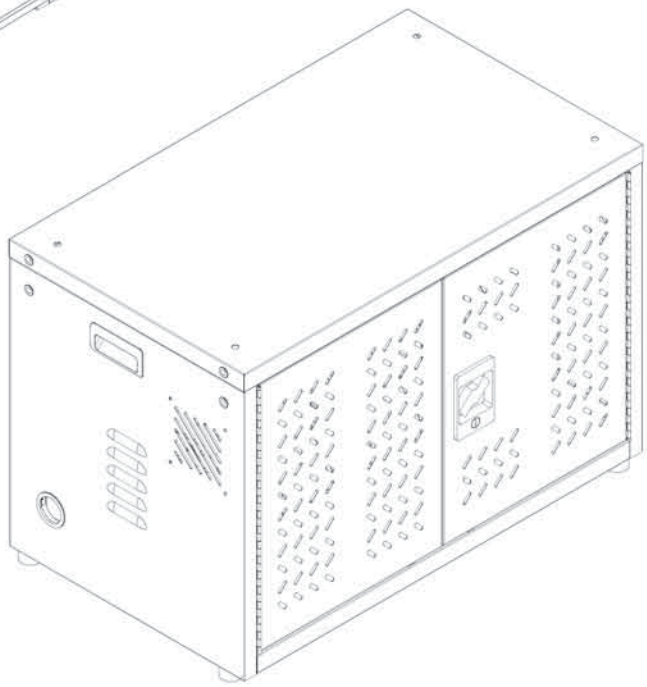

STOREMORESTORE
Efficient Productive Storage Products
1-855-786-7667
WWW.STOREMORESTORE.COM

Optional Handle and caster kit

Model 670049

CONTENTS		
REF.	QTY.	DESCRIPTION
1	2	Swivel locking caster
2	2	Caster channel
3	2	Rigid caster
4	1	Handle
H1	16	M8 x 1.25 x 20mm Lg. Phillips Pan Head Screw
H2	20	M8 Lock Washer
H3	4	M8 Plain Washer
H4	4	M8 x 1.25 x 16mm Lg. Hex Sccket Head Screw
H5	1	6mm Hex Key

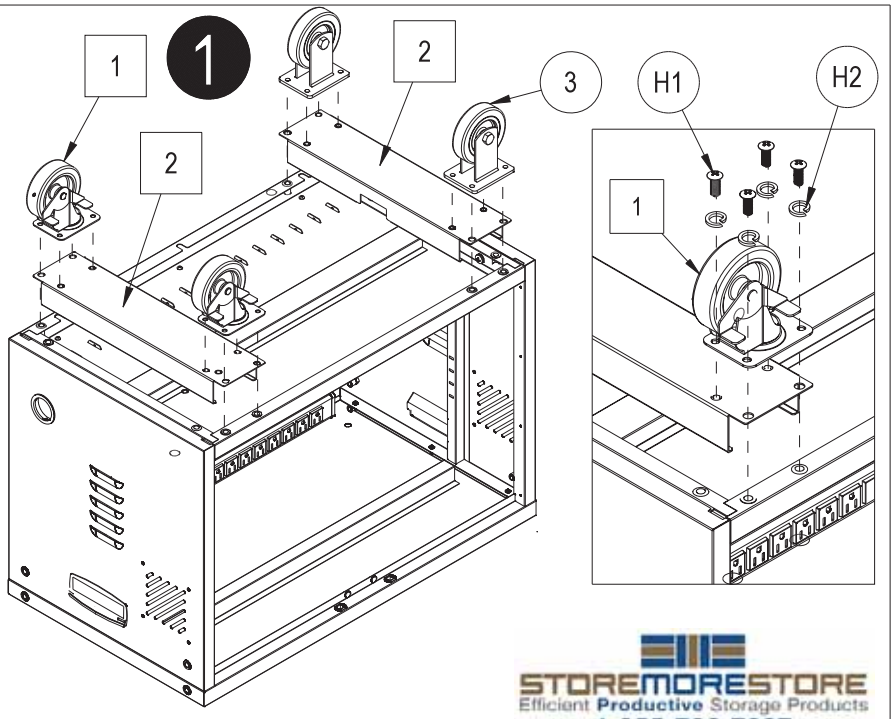

STOREMORESTORE
Efficient Productive Storage Products
1-855-786-7667
WWW.STOREMORESTORE.COM

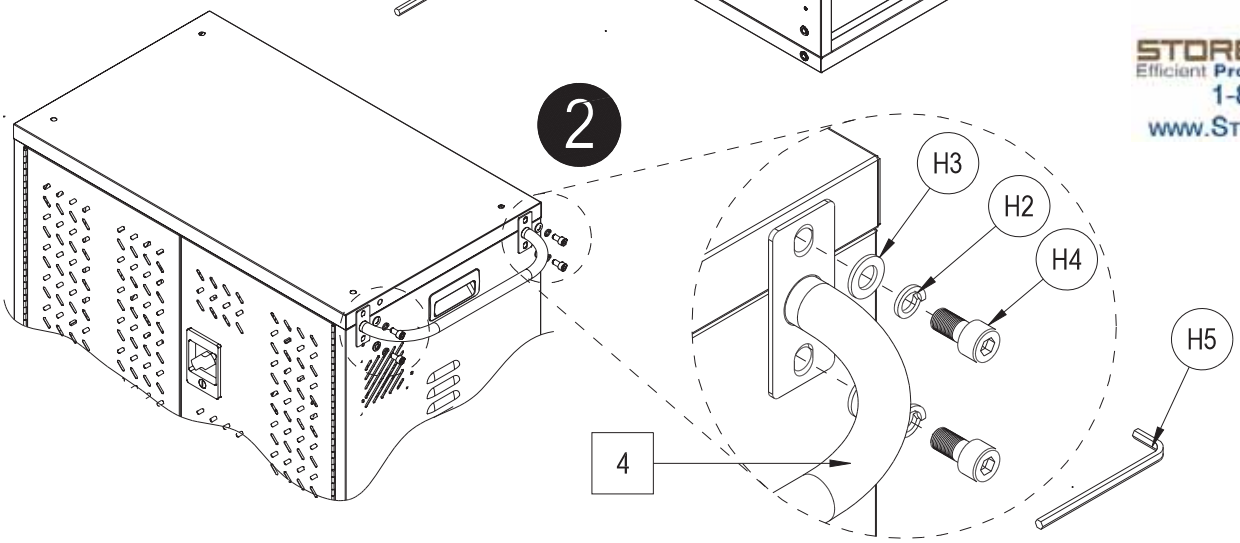
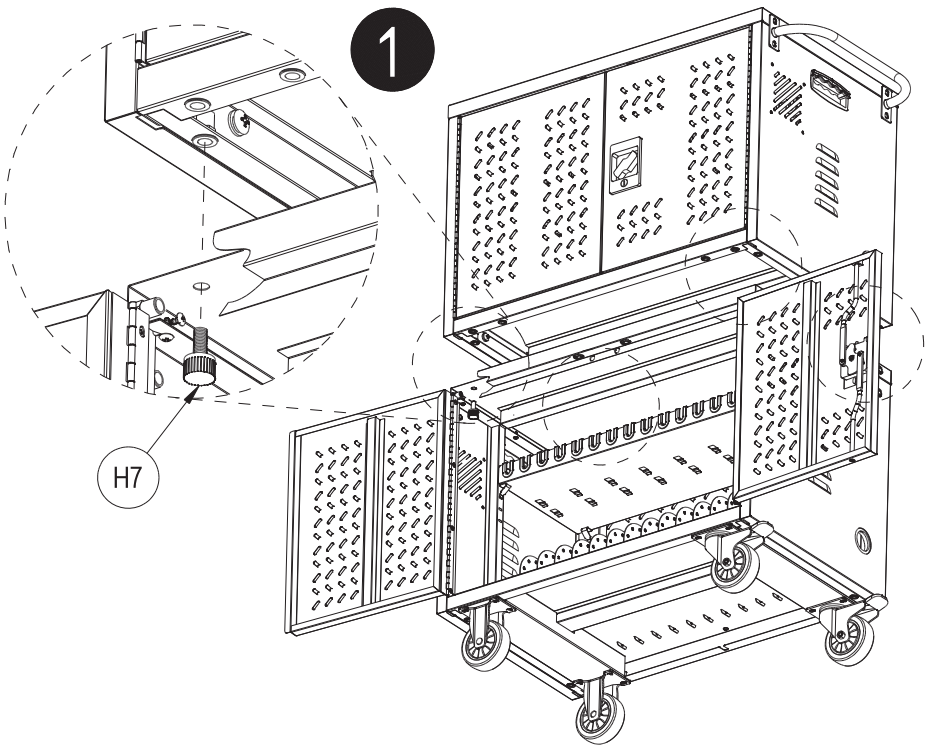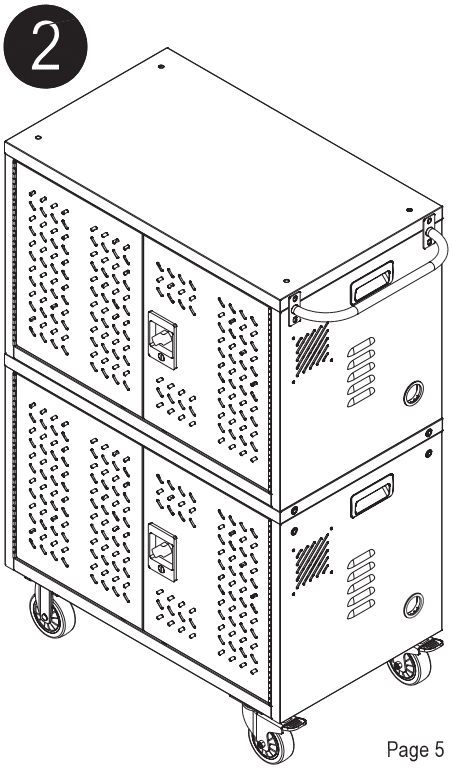
stacking (2) cabinets