TOOLS REQUIRED FOR ASSEMBLY

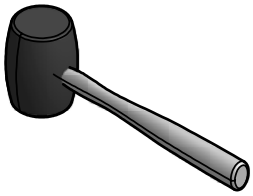

Rubber Mallet

or

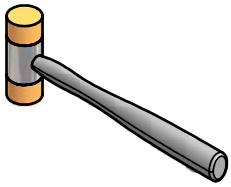

Plastic Tip Hammer

PARTS REQUIRED FOR ASSEMBLY OF SINGLE ENTRY STARTER

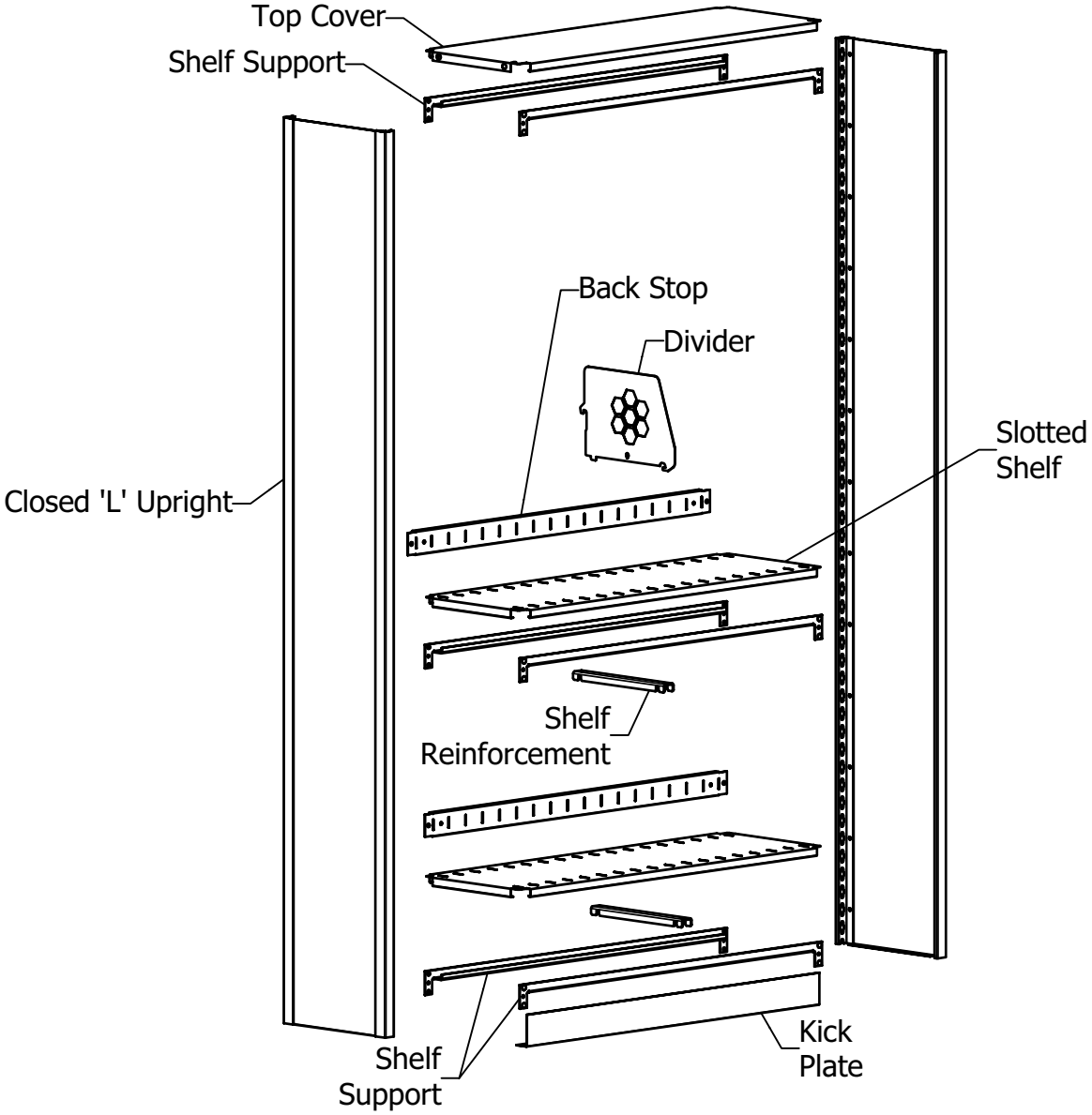

For more information contact StoreMoreStore toll free 1-855-786-7667 or customerservice@storemorestore.com

2" Kick Plate

Figure A

(Typical Configuration)

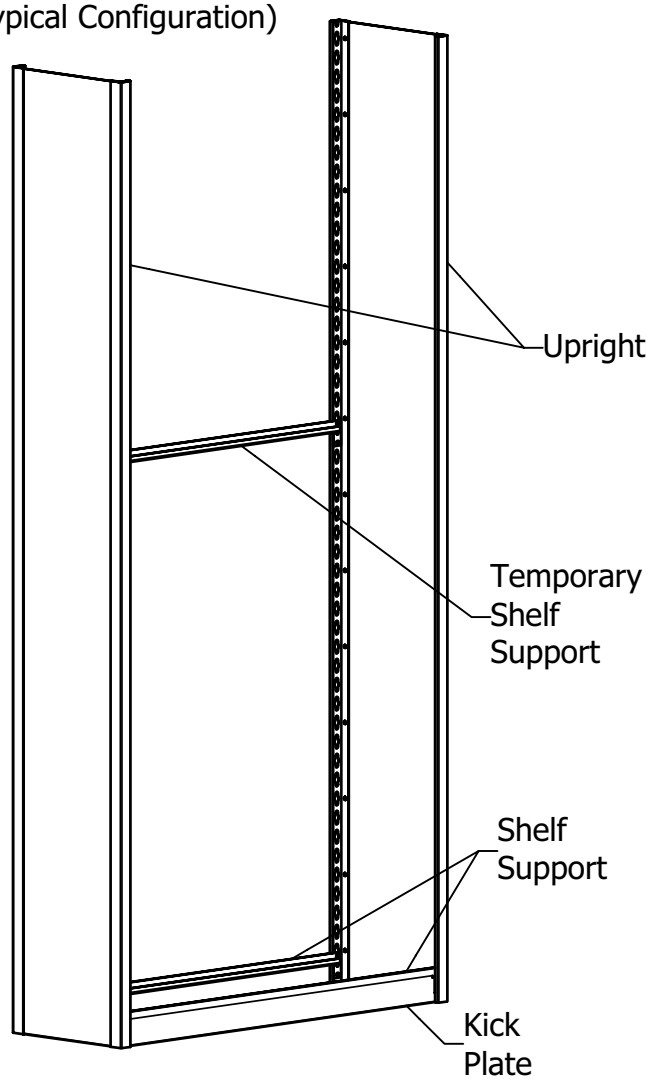

Step 1:

Temporarily mount a shelf support at chest height to hold uprights in position (see Figure A). Rivets of shelf support fit into keyholes on uprights. Use a rubber mallet or plastic tip hammer to tap shelf support into bottom of keyholes.

Step 2:

Depending on configuration ordered, bottom components will be assembled as shown in either Figure A (kick plate) or Figure B (mobile ready).

Note:

The kick plate will be placed against the uprights, the shelf support rivets will be placed into the appropriate keyholes. Using a rubber mallet or plastic tip hammer, tap on the shelf support seating the rivets in the bottom of the keyholes holding the kick plate in place.

Mobile Ready

Figure B

(Alternate Configuration)

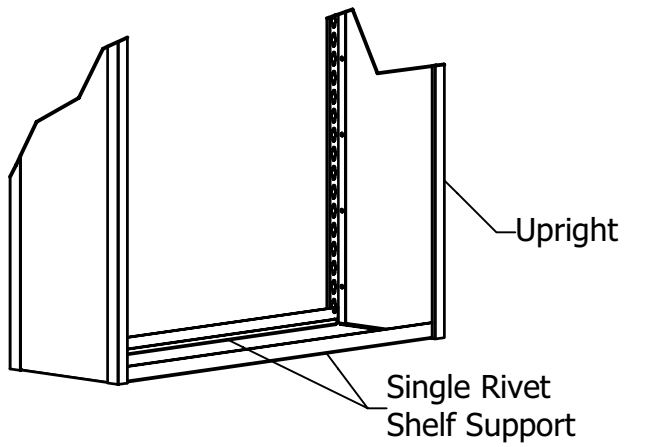

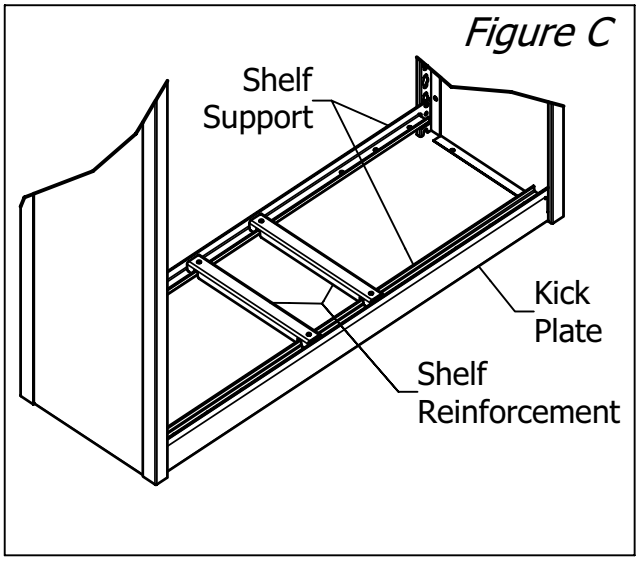

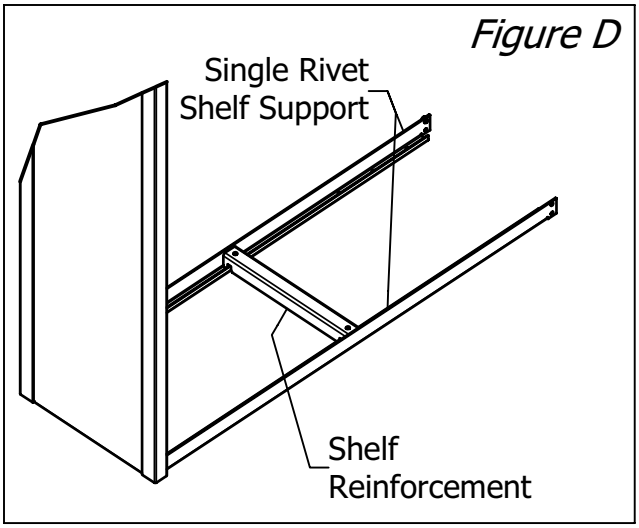

Step 3:

If required (See Table 1), install shelf reinforcements as shown in Figure C (for units with kick plate) or Figure D (for mobile ready units).

Table 1 Typical Shelf Reinforcements	
Depth of Shelving	No. of Reinforcements
12" (Kick Plate Config)	None
12" (Mobile Ready Config)	One
15" (Kick Plate Config)	None
15" (Mobile Ready Config)	One
18" (Any Config)	Two

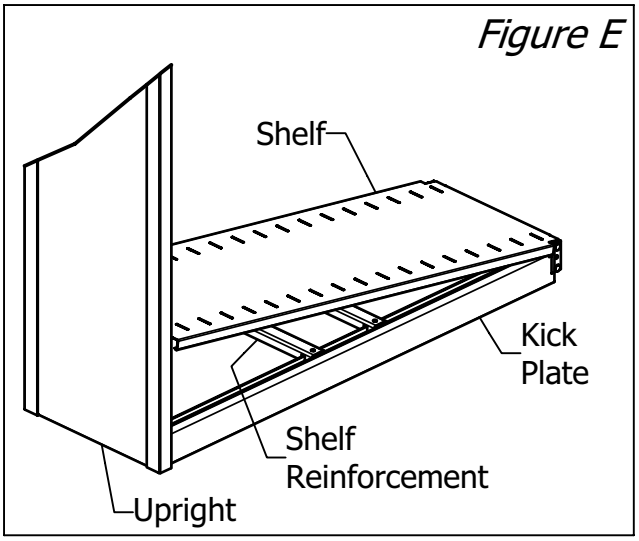

Step 4:

Install shelf by tilting as shown in Figure E (kick plate configuration shown). Shelf should then lie flat on shelf support and shelf reinforcement.

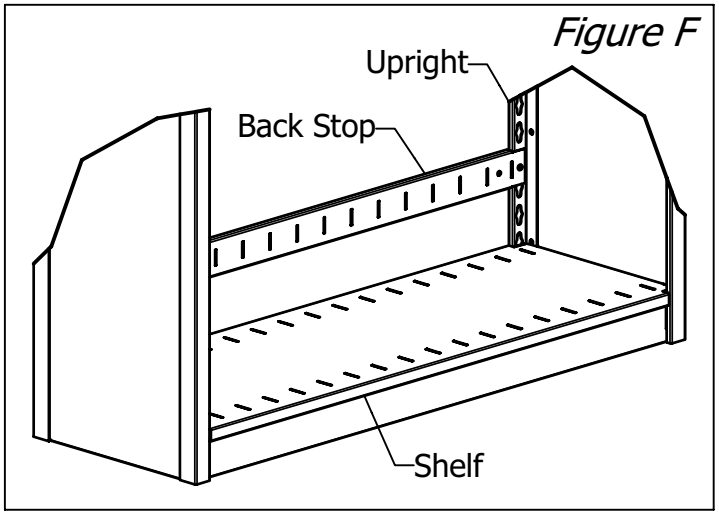

Step 5:
Install back stop for bottom shelf. Count up three complete keyholes from top of shelf and place rivets located on each end of back stop in these keyholes (see Figure F).

Step 6:
Install remainder of shelf supports, shelves, back stops, & shelf reinforcements (if required) as previously shown. Keep in mind your installation may be different, as shelf spacing varies from job to job.

Typical Clear Openings for Letter/Legal Shelving

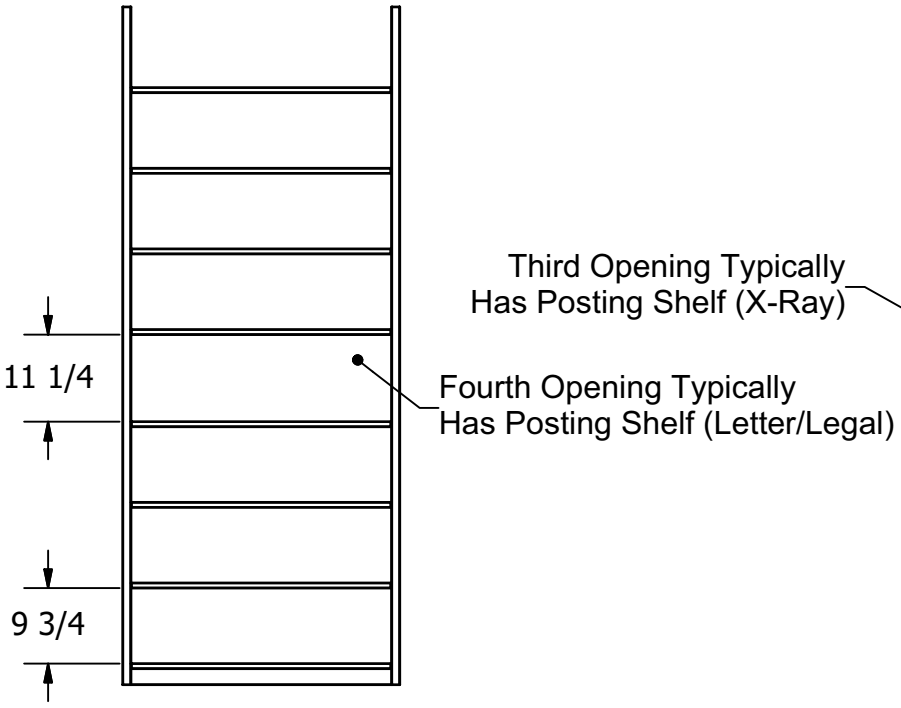

Typical Clear Openings for X-Ray Shelving

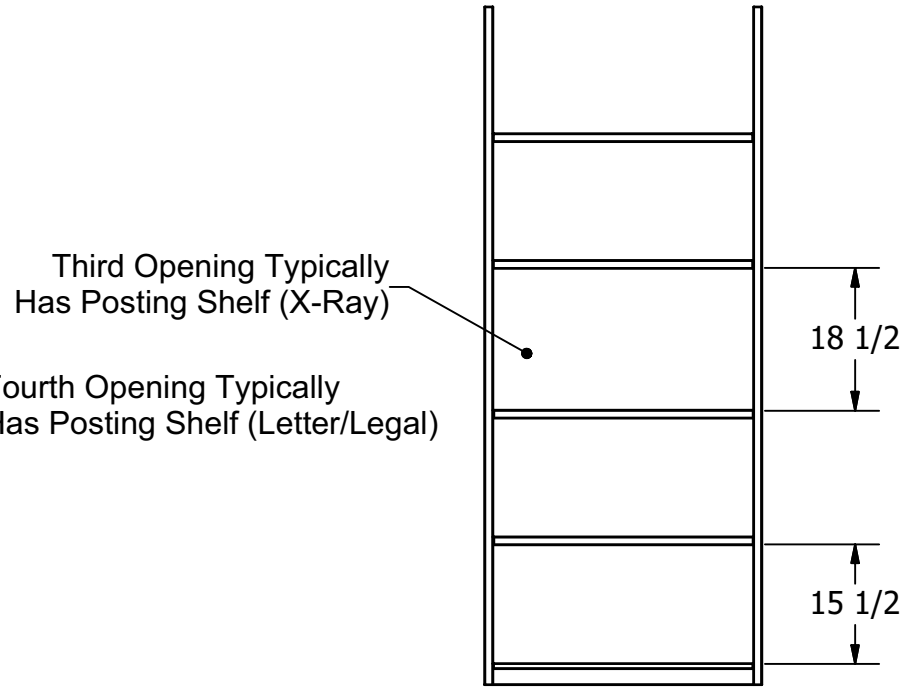

If using or planning to use a posting shelf, leave space for it to be mounted when installing shelf supports and shelves. Not all shelving unit combinations will allow equal spacing of shelves when installing posting shelves. One opening will need to be larger than the rest. Check with your dealer or supplier for the correct choices of uprights and shelf openings required when a posting shelf is desired.

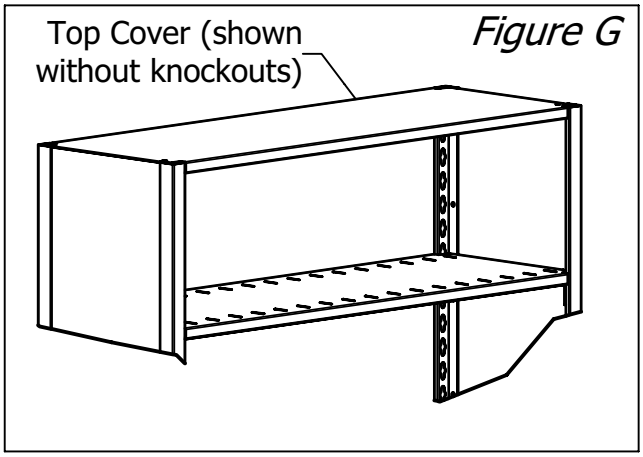

Figure G

Step 7:
Install top cover the same way shelves were installed. Shelf supports for top cover should be positioned in the top two most keyholes.

Note:
Top shelf does not require shelf reinforcements. Depending on components ordered, top cover may or may not have knockouts in it. Figure G shows top cover without knockouts. Top cover with knockouts is required only when unit is being used on a mobile system.

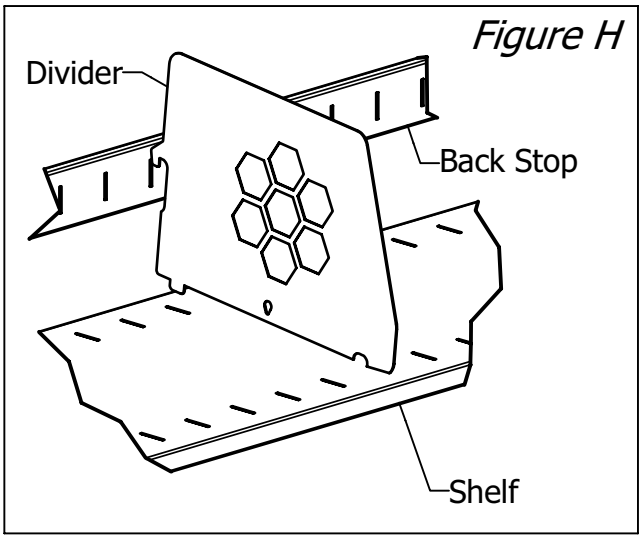

Figure H

Step 8:
To install dividers, it must be tilted up in back for hook in front to be inserted into front slot. Then tilt rear of divider down into slot on back stop as shown in Figure H.

END OF SECTION FOR SINGLE ENTRY STARTER UNITS

For more information contact StoreMoreStore toll free 1-855-786-7667 or customerservice@storemorestore.com

4Post Garment Rack Assembly Instructions

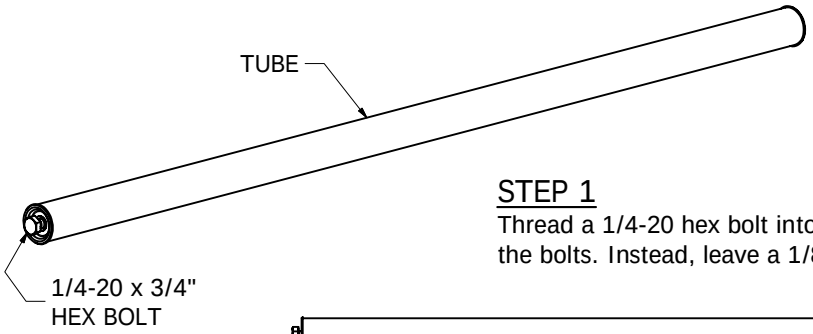

STEP 1

Thread a 1/4-20 hex bolt into each side of the garment tube. Do not fully tighten the bolts. Instead, leave a 1/8" gap between the bolt head & the threaded insert.

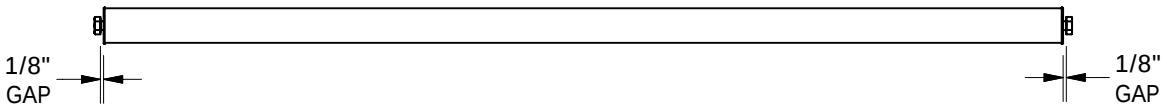

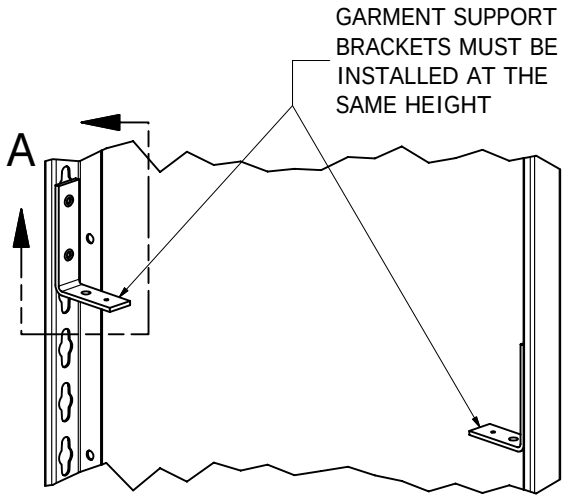

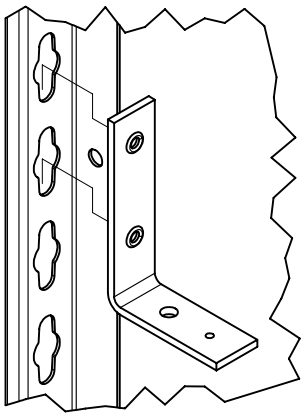

DETAIL A

STEP 2

There needs to be a support bracket attached to each corner of the 4Post unit to mount the garment rack. To install the garment rack correctly, support brackets must be level with each other. To attach brackets, simply seat the rivets of the support brackets into the bottom of the upright keyholes. NOTE: Support brackets may need to be installed upside down if a shelf falls right above the garment rod.

STEP 3

Place an L-Bracket over the support brackets.
Attach the L-Bracket with #8 x 3/8" tek screws.
Repeat for the opposite side.

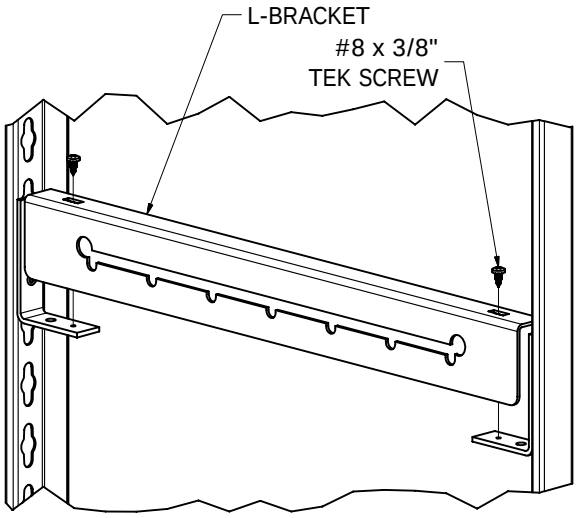

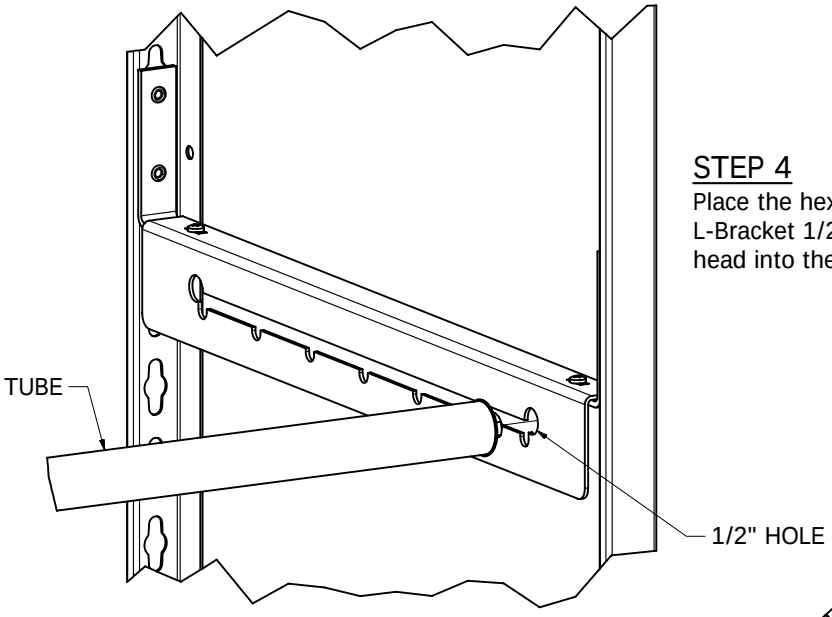

STEP 4

Place the hex head of one of the bolts into an L-Bracket 1/2" hole. Snap the opposite hex head into the opposite L-Bracket's 1/2" hole.

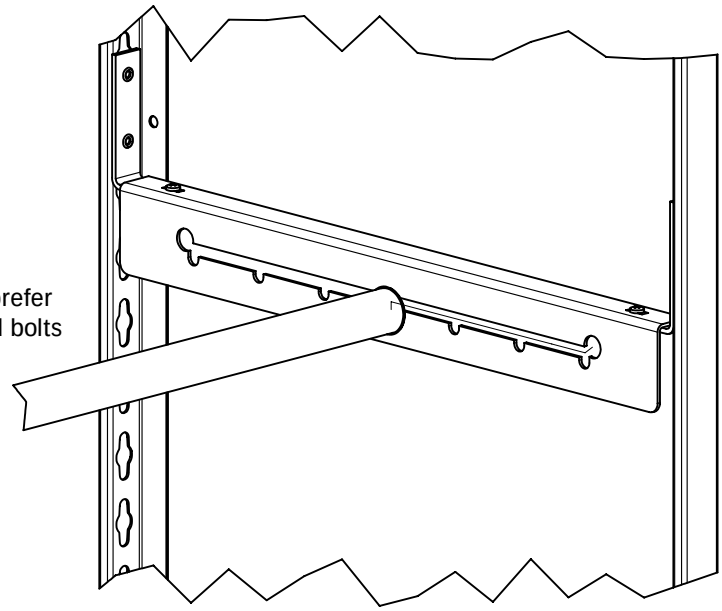

STEP 5

Slide the tube to the desired slot for your application. If you'd prefer the tube not have adjustability, tighten the (2) 1/4-20 hex head bolts with an open ended wrench.

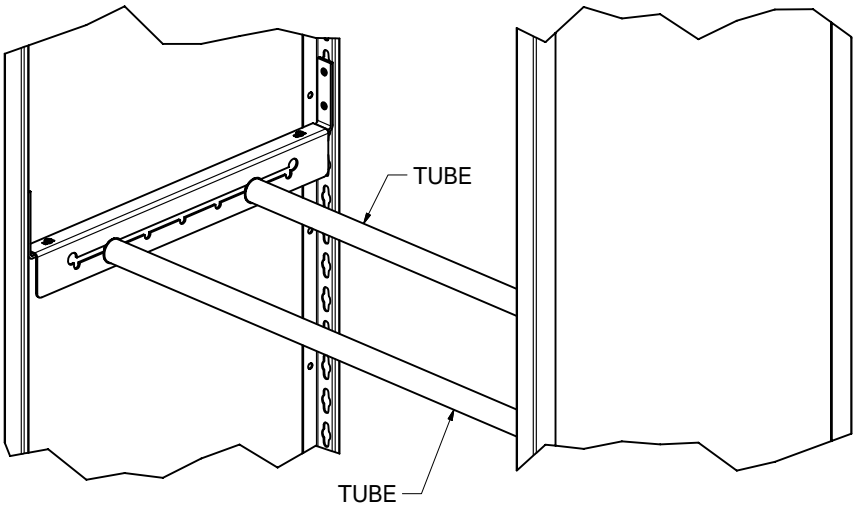

NOTE

Multiple tubes may be used on the same L-Bracket, depending on their purpose or size. Install the extra tubes following steps 4 & 5.

For more information contact StoreMoreStore toll free 1-855-786-7667 or customerservice@storemorestore.com